MDR POWER SUPPLY

PART # – 22071–480–24–20A
480VAC – 24VDC – 20 AMP POWER SUPPLY SINGLE CABINET

PART # – 22071–480–24–40A
480VAC – 24VDC – 40 AMP POWER SUPPLY SINGLE CABINET

PART # – 22071–BRKT
POWER SUPPLY SINGLE CABINET BRACKET

SECTION "A"

SHT	DESCRIPTION
1	COVER SHEET / PART NUMBERS / DWG TABLE OF CONTENTS

SECTION "D" - MECHANICAL

SHT	DESCRIPTION
1	12 INCH ENCLOSURE MOUNTING BRACKET

SECTION "M" - ENCLOSURE AND LAYOUT

SHT	DESCRIPTION
1	ENCLOSURE LAYOUT
2	ENCLOSURE INSERT LAYOUT AND BILL OF MATERIALS

SECTION "H" - SCHEMATICS

SHT	DESCRIPTION
1	SCHEMATICS / TERMINALS / ASSEMBLY NOTES

AUTO SOL INC
INDUSTRIAL AUTOMATED SOLUTIONS
1120 NEWELL PARKWAY STE. B MONTGOMERY, AL
AUTOSOLCONTROLS.COM
334.625.0555

MDR POWER SUPPLY
22071–480–24–XXA

AUTO SOL INC
INDUSTRIAL AUTOMATED SOLUTIONS
1120 NEWELL PARKWAY STE. B MONTGOMERY, AL
AUTOSOLCONTROLS.COM
334.625.0555

NO.	DATE	REVISION	BY

DWG DESCRIPTION

COVER SHEET

ENGINEER	CHECKED BY
PROJECT NO 22071	DRAWN BY LDC
SCALE NONE	DATE 22/10/06

DWG NO 22071–A–01

SHEET NO 1 OF 1

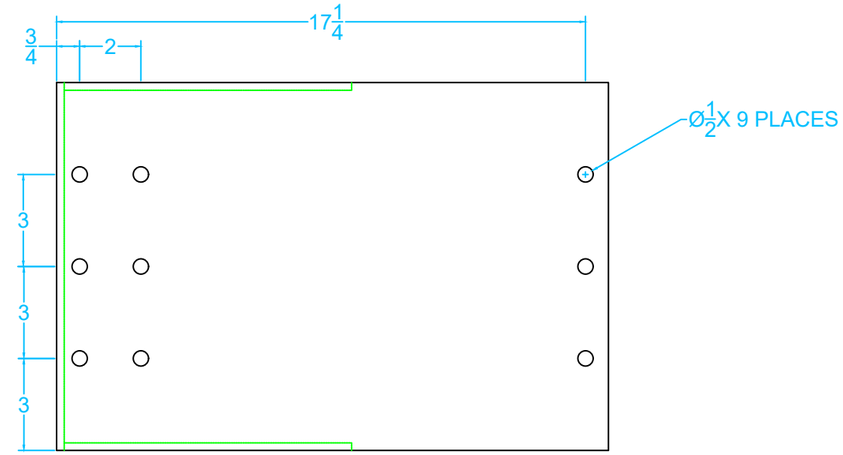

TOP
(BOTTOM OF CONVY MOUNTING)

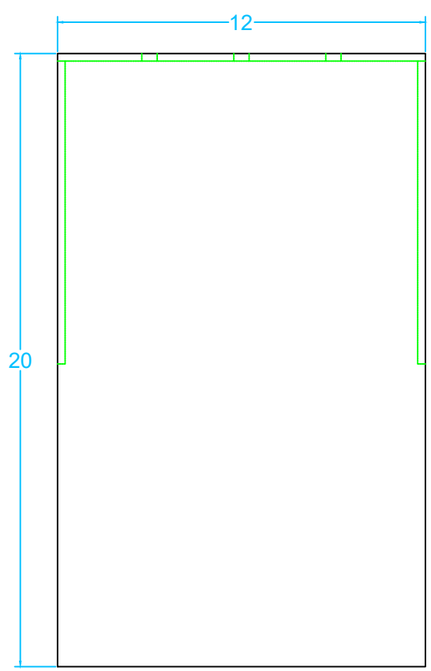

FACE
(ENCLOSURE MOUNTING)

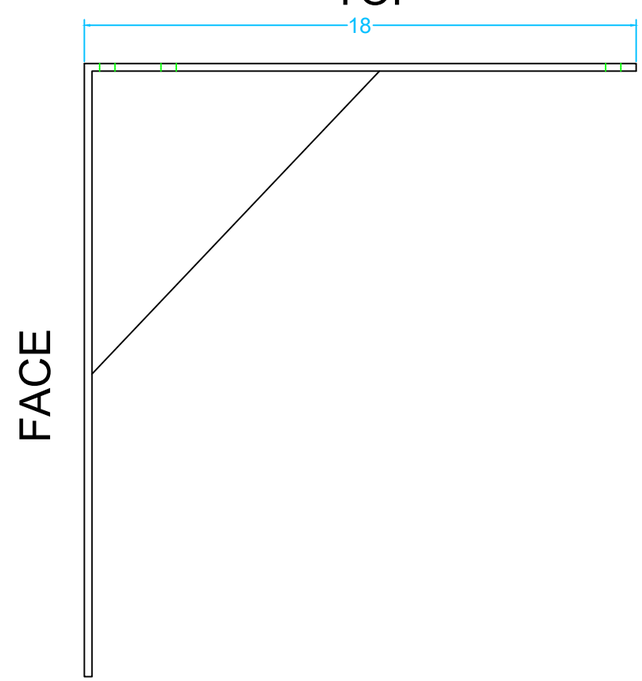

MDR POWER SUPPLY
22071-480-24-XXA

AUTO SOL INC
INDUSTRIAL AUTOMATED SOLUTIONS
1120 NEWELL PARKWAY STE. B MONTGOMERY, AL
AUTOSOLCONTROLS.COM
334.625.0555

NO.	DATE	REVISION	BY

DWG DESCRIPTION

12 INCH
ENCLOSURE
BRACKET

ENGINEER	CHECKED BY
PROJECT NO 22071	DRAWN BY LDG
SCALE NONE	DATE 22/10/06

DWG NO
22071-D-01

SHEET NO
1 OF 2

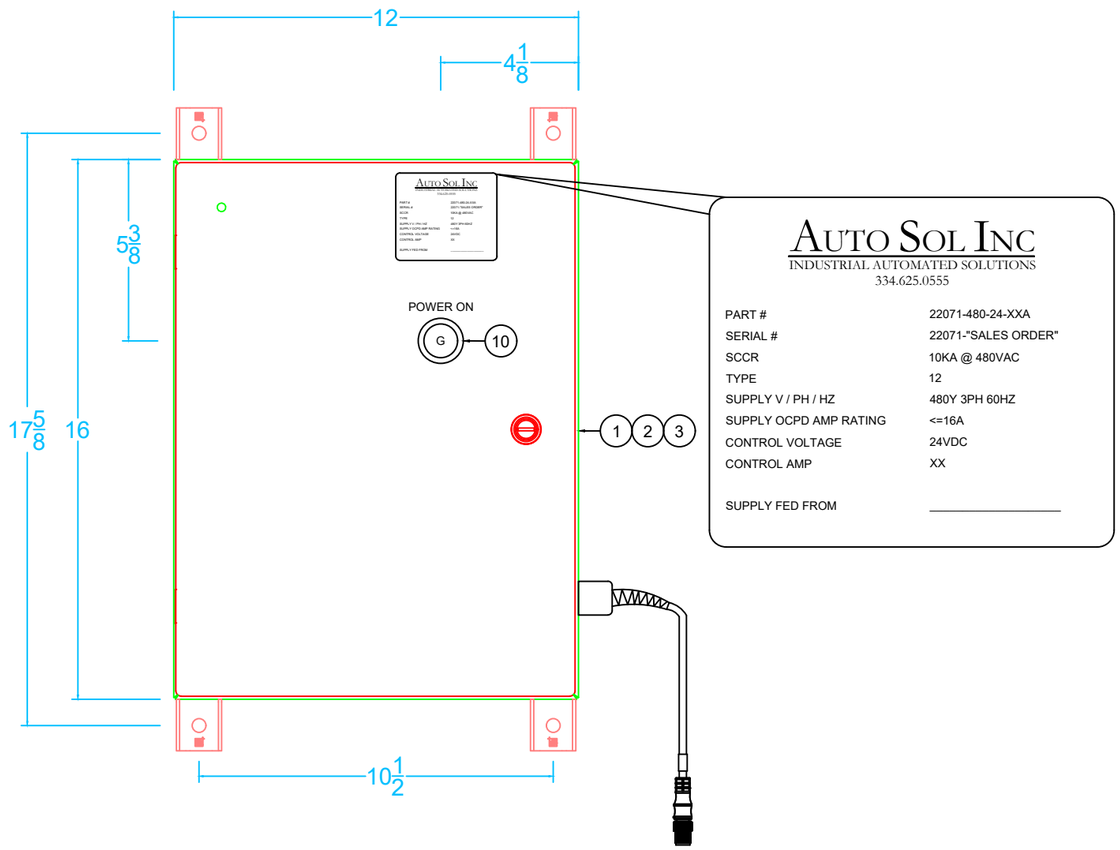

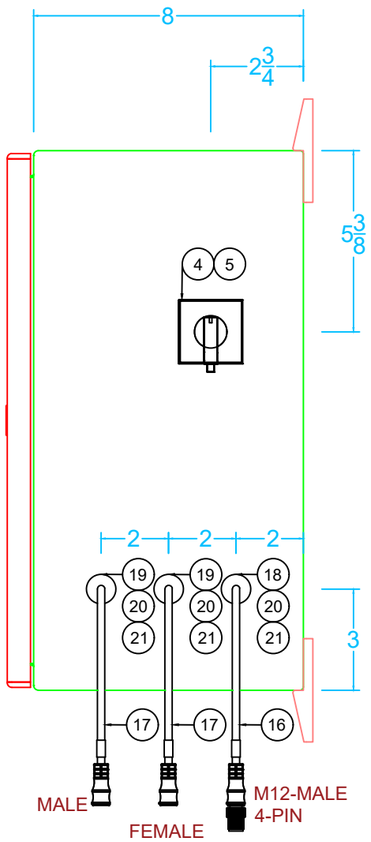

MDR POWER SUPPLY
22071-480-24-XXA

AUTO SOL INC
INDUSTRIAL AUTOMATED SOLUTIONS
1120 NEWELL PARKWAY STE. B MONTGOMERY, AL
AUTOSOLCONTROLS.COM
334.625.0555

NO.	DATE	REVISION	BY

DWG DESCRIPTION

ENCLOSURE LAYOUTS

ENGINEER	CHECKED BY
PROJECT NO 22071	DRAWN BY LDG
SCALE NONE	DATE 22/10/06
DWG NO 22071-M-01	
SHEET NO 1 OF 2	

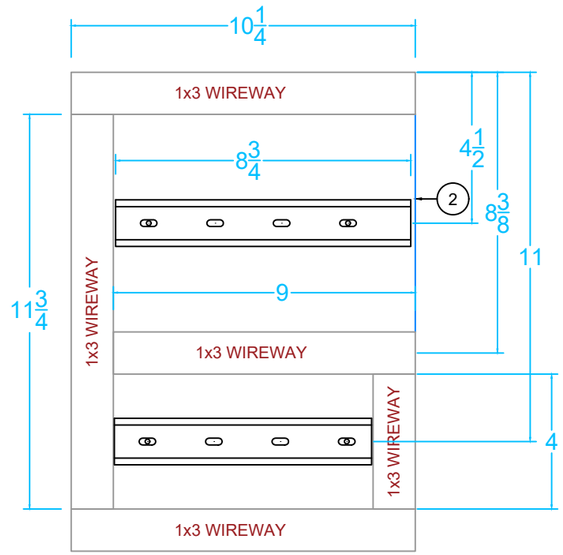

TYPICAL

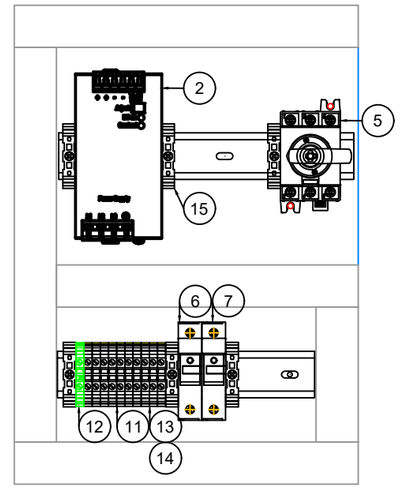

20 AMP
INSERT LAYOUT

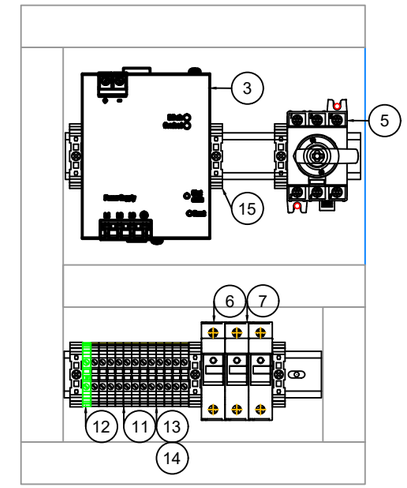

40 AMP
INSERT LAYOUT

ITEM	DESCRIPTION	CAT #	MANUFACTURER	20A QTY	40A QTY
1	ENCLOSURE	CSD16128LG	HOFFMAN	1	1
2	ENCLOUSRE INSERT	CP1612	HOFFMAN	1	1
3	ENCLOSURE MOUNTING KIT	CMFKSS	HOFFMAN	1	1
4	DISCONNECT HANDLE	H4X-01R	EATON	1	1
5	DISCONNECT	RD40-3-508	EATON	1	1
6	3A SINGLE POLE D CURVE BREAKER	1492-SPM1C030	ALLEN BRADLEY	1	1
7	20A SINGLE POLE C CURVE BREAKER	1492-SPM1C200	ALLEN BRADLEY	1	2
8	480VAC / 24VDC POWER SUPPLY 20A	QT20.241	PULS	1	-
9	480VAC / 24VDC POWER SUPPLY 40A	QT20.241	PULS	-	1
10	POWER LAMP - 24VDC LED GREEN	CSW30-SD2E26	FACTORYMATION	1	1
11	TERMINAL - UT4-PE SINGLE LEVEL	3044128	PHOENIX CONTACT	1	1
12	TERMINAL - UT4 SINGLE LEVEL	3044102	PHOENIX CONTACT	10	12
13	TERMINAL - UT4 SINGLE LEVEL PARTITION PLATE	3047167	PHOENIX CONTACT	1	1
14	TERMINAL - UT4 SINGLE LEVEL END COVER	3047028	PHOENIX CONTACT	1	1
15	END CLAMPS	800886	PHOENIX CONTACT	6	6
16	M12 - 4-PIN MALE CORDSET	889D-M4AC-5	ALLEN BRADLEY	1	1
17	HYTROL POWER EXT CABLE	032-71000	HYTROL	1	1
18	1/2 CORD GRIP (0.125-0.250)	CG50-250	CROUSE-HINDS	1	1
19	1/2 CORD GRIP (0.250-0.375)	CG50-350	CROUSE-HINDS	2	2
20	1/2 SEALING RING	SG1	CROUSE-HINDS	3	3
21	LOCK NUT	11	CROUSE-HINDS	3	3
22					
23					
24					
25					

MDR POWER SUPPLY
22071-480-24-XXA

AUTO SOL INC
INDUSTRIAL AUTOMATED SOLUTIONS
1120 NEWELL PARKWAY STE. B MONTGOMERY, AL
AUTOSOLCONTROLS.COM
334.625.0555

NO.	DATE	REVISION	BY

DWG DESCRIPTION

INSERT LAYOUT
AND
BOM

ENGINEER	CHECKED BY
PROJECT NO 22071	DRAWN BY LDG
SCALE NONE	DATE 22/10/06
DWG NO 22071-M-02	
SHEET NO 2 OF 2	

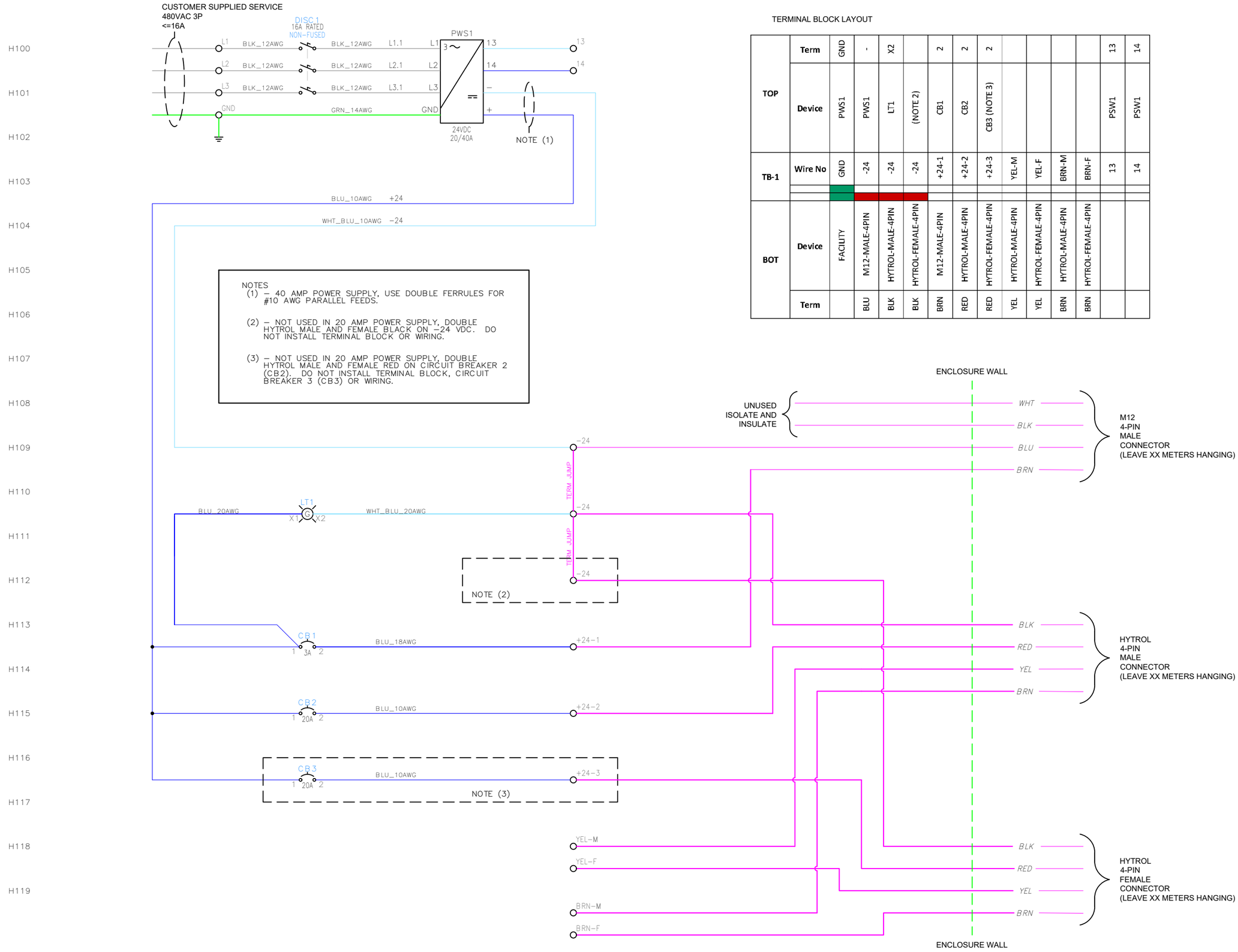

NOTES
(1) – 40 AMP POWER SUPPLY, USE DOUBLE FERRULES FOR #10 AWG PARALLEL FEEDS.

(2) – NOT USED IN 20 AMP POWER SUPPLY, DOUBLE HYTROL MALE AND FEMALE BLACK ON −24 VDC. DO NOT INSTALL TERMINAL BLOCK OR WIRING.

(3) – NOT USED IN 20 AMP POWER SUPPLY, DOUBLE HYTROL MALE AND FEMALE RED ON CIRCUIT BREAKER 2 (CB2). DO NOT INSTALL TERMINAL BLOCK, CIRCUIT BREAKER 3 (CB3) OR WIRING.

TERMINAL BLOCK LAYOUT

TOP	Term	GND	-	X2		2	2	2					13	14
	Device	PWS1	PWS1	LT1	(NOTE 2)	CB1	CB2	CB3 (NOTE 3)					PSW1	PSW1
TB-1	Wire No	GND	-24	-24	-24	+24-1	+24-2	+24-3	YEL-M	YEL-F	BRN-M	BRN-F	13	14
BOT	Device	FACILITY	M12-MALE-4PIN	HYTROL-MALE-4PIN	HYTROL-FEMALE-4PIN	M12-MALE-4PIN	HYTROL-MALE-4PIN	HYTROL-FEMALE-4PIN	HYTROL-MALE-4PIN	HYTROL-FEMALE-4PIN	HYTROL-MALE-4PIN	HYTROL-FEMALE-4PIN		
	Term		BLU	BLK	BLK	BRN	RED	RED	YEL	YEL	BRN	BRN		

MDR POWER SUPPLY
22071–480–24–XXA

AUTO SOL INC
INDUSTRIAL AUTOMATED SOLUTIONS
1120 NEWELL PARKWAY STE. B MONTGOMERY, AL
AUTOSOLCONTROLS.COM
334.625.0555

NO	DATE	REVISION	BY

DWG DESCRIPTION

SCHEMATICS
AND
TERMINALS

ENGINEER	CHECKED BY
PROJECT NO 22071	DRAWN BY LDC
SCALE NONE	DATE 22/10/06
DWG NO 22071–H–01	
SHEET NO 1 OF 1	